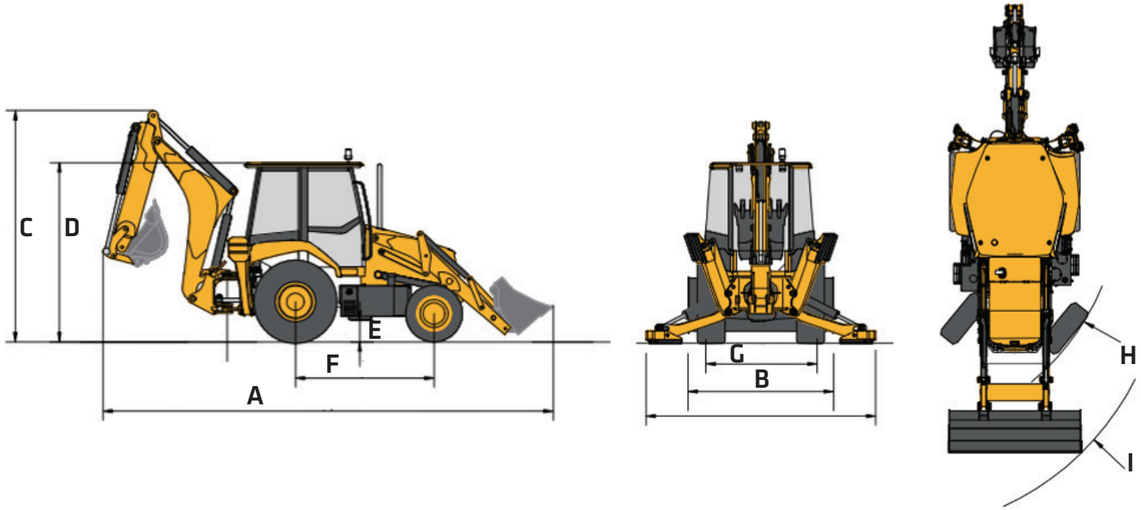

DIMENSIONS

A	Maximum length (transport)	24’ 3”
B	Maximum width (transport)	7’ 6”
C	Maximum height (transport)	12’ 3”
D	The top of the cab height	10’ 3”
E	Ground clearance (transmission)	1’ 1”
F	Wheelbase (Axle to Axle)	7’ 4”
G	Wheelbase (Width - Middle Tire), Rear	5’ 11”
H	Turning radius (outside of the front tires)	13’ 11”
I	Turning radius (outside of the bucket)	15’ 9”
–	Stabilizer Overall Width	11’ 5”

In the interest of continual equipment development, SANY America Inc. reserves the right to change these specifications at any time without prior notification.
©2026 SANY America Inc. HEXPS26BHL95001

INDUSTRY’S STRONGEST STANDARD WARRANTY | 4-YEAR 4,000 HOURS

*Warranty applies to 2026 Backhoe Loader models.

SANY America Inc. 318 SANY Way
Peachtree City, Georgia 30269
470.552.SANY sanyamerica.com

BHL95

TELESCOPIC BOOM
BACKHOE LOADER

19,842 LBS OPERATING WEIGHT
95 HP NET ENGINE POWER
17.6 FT MAX DIGGING DEPTH

SANY

TECHNICAL SPECIFICATIONS

ENGINE	
Engine Model	Deutz TCD3.6 L4
Non-Road Emission Standard	EPA Final Tier 4/EU Stage V
Cylinders	4
Displacement	219.69 cu. in.
Gross Power	99 hp
Net Power	95 hp
Maximum Torque	302.4 ft-lbs @ 1,600 rpm
BorexStroke	98mm x 120mm
Compression Ratio	17.2

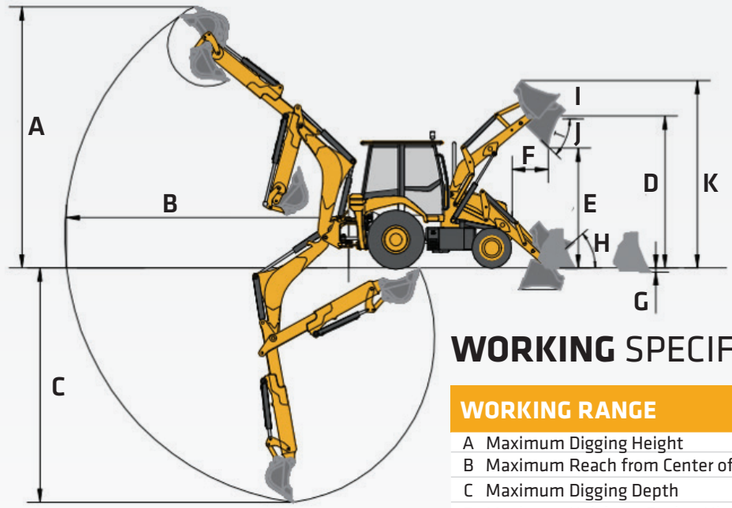

WORKING SPECIFICATIONS

WORKING RANGE		
A	Maximum Digging Height	19’8”
B	Maximum Reach from Center of Swing Pivot	21’ 10”
C	Maximum Digging Depth	17’ 7”
D	Maximum Height to Bucket Hinge Pin	11’ 5”
E	Dump Clearance	8’ 10”
F	Reach at Dump Position	2’ 5”
G	Maximum Digging Depth with Bucket Leveled	3”
H	Bucket Rollback Angle @ Ground Level	40°
I	Bucket Rollback Angle @ Full Height	51°
J	Loader Dump Angle @ Full Height	44°
K	Maximum Operating Height	14’ 1”

DIGGING PERFORMANCE	
Bucket Breakout Force–Excavator	12,364 lbf
Bucket Breakout Force–Loader	11,240 lbf

SANY America Inc. reserves the right to change these specifications at any time without prior notification. ©2026 SANY America Inc. HEXPS26BHL95001

BHL95

TELESCOPIC BOOM
BACKHOE LOADER

19,842 LBS OPERATING WEIGHT
95 HP NET ENGINE POWER
17.6 FT MAX DIGGING DEPTH

STANDARD FEATURES

	POWERTRAIN (ENGINE, TRANSMISSION & AXLES)
	3.6l Deutz TCD-L4 | Final Tier 4 (FT4) Certified
	Dual-element engine air filter
	ZF 4WD Powershift Transmission - 4 Speed Forward/Reverse
	FNR Transmission directional control switch on loader joystick
	Heavy duty axles with Limited Slip Differential (Rear) - Open Differential (Front)
	Parking brake, spring applied, hydraulic release
	Service brake, hydraulic power, self-adjusting wet multi-disc
	Tires (Front): 12-16.5 12PR, Tubeless
	Tires (Rear): 19.5-24 12PR. Tubeless
	HYDRAULIC SYSTEM
	Load Sensing Hydraulics with Pilot Controls
	Hydraulic valve, hydrostatic steering
	Adjustable Auxiliary hydraulic-flow
	Hydraulic valve, loader 3-function, Backhoe 8-Function
	ISO/SAE Control pattern change valve
○	One-Way (Backhoe) Auxillary Hydraulics (breaker Line)
	Two-Way (Backhoe) Auxillary Hydraulics
	Two-Way (Loader) Auxillary Hydraulics
	ATTACHMENTS & WORKING EQUIPMENT
	Telescopic Stick
	Flip-over Stabilizer Pads (Steel) and Outrigger Cylinder Guards
○	Flip-over Stabilizer Pads (Rubber) and Outrigger Cylinder Guards
	Loader Bucket, 1.0 m^3, 4-in-1 multipurpose (1.3 yd^3) | Pin-On
○	Loader Bucket, 1.0 m^3, general purpose (1.3 yd^3) | Pin-On
○	Loader bucket, bucket tooth
○	Loader bucket, bucket wear plate
	Backhoe Bucket, 0.2 m^3 (28" - 0.26 yd^3) | Pin-On
○	Backhoe Bucket, 0.3 m^3 (36" - 0.39 yd^3) | Pin-On
○	Loader Attachment Quick Coupler (Hydraulic)
○	Backhoe Attachment Quick Coupler (Manual)
○	Backhoe Hydraulic Thumb
	Loader Boom Support service lock
	Counterweight, 460 kg (1,014 lb)
	FEATURE FUNCTIONS
	Powertrain: Engine Auto-idle
	Powertrain: Transmission Clutch Cut-off Function
	Powertrain: 2WD/4WD Switch Control
	Powertrain: Kick-down on loader joystick (2nd gear to 1st gear)
	Hydraulics: Ride-control (Manual & Automatic Activation)
	Loader Feature: Bucket Float Function
	Loader Feature: Bucket Level (Return-to-Level) & Return-to-Dig

	OPERATOR'S STATION
	ROPS/FOPS Certified Cabin
○	ROPS/FOPS Certified Canopy
	Air-suspension heated seat
	AM/FM radio with USB and Bluetooth® connectivity (Cab Only)
	Automatic HVAC climate control; air conditioning & heat (Cab Only)
	Seat belt (3 inch, retractable lap-belt)
	Auxiliary (12V) Power Socket/Outlet
	Heavy duty rubber floor mat
	Interior cabin light
	Cup Holder
	Hour meter (In Electronic display)
	Horn (Loader Steering Column & Backhoe Joystick Activated)
	Front and rear windshield wiper with variable speeds
	Built-in operator's manual storage compartment
	Loader Steering , Adjustable Steering wheel: Column Tilt
	Backhoe joystick, adjustable tilt
	LCD Display - Digital Guauges: DEF, Fuel level, Engine speed, & engine coolant temp.
	System monitoring with alarm: Fuel Filter; engine air filter; transmission & engine Temp.
	Ignition password protection (Operator Code)
	Motion alarm (conforms to SAE J994)
	Reverse alarm
	ELECTRICAL
	12V System (1x 12V 165ah 850-CCA Battery)
	120-amp alternator
	Ground level electrical battery disconnect (lockout tag-out)
	VISIBILITY (LIGHTS & MIRRORS)
	LED Work lights: 4 front and 4 rear
	Roof-mounted beacon light
	Rear-view mirror (Inside operator station)
	Rear-view mirror (External)
	Loader Linkage mirror (External)

"•" Optional

OTHER SPECIFICATIONS

WEIGHT	
Operating Weight	19,842 lbs
TRANSMISSION	
Manufacturer	ZF
Type	4WD Powershift
Shift Modes	4 Speed Forward/Reverse
Speed Gear 1	3 mph
Speed Gear 2	6 mph
Speed Gear 3	12 mph
Speed Gear 4	22 mph
Speed ratio of front axle	13.125
Speed ratio of rear axle	19.911
front tires	12–16.5 12PR
rear tires	19.5–24 14PR
Front tire pressure	79.8 psi
Rear tire pressure	33.4-33.7 psi
HYDRAULIC SYSTEM	
Hydraulic System Type	Load Sensing with Pilot Controls
Main Hydraulic Pump (Type)	Variable Displacement-Axial Piston
Hydraulic Power	39 kW @ 2,200 rpm
System Flow	41.21 gpm
Operating Pressure	3611.4 psi
One-way Aux Line (Max Flow)	36.98 gpm
One-way Aux Line (Max Pressure)	2320.6 psi
SERVICE REFILL CAPACITIES	
Fuel Tank Capacity (Diesel)	37.0 gal
DEF Tank Capacity	3.2 gal
Hydraulic Oil Capcity	31.7 gal
Engine Oil Capacity	2.2 gal
Cooling System Capacity	6.1 gal
Transmission Oil Capacity	4.8 gal
Front Axle Oil Capacity (Middle)	1.7 gal
Front Axle Oil Capacity (Left/Right)	0.2 gal
Rear Axle Oil Capacity (Middle)	4.8 gal
Rear Axle Oil Capacity (Left/Right)	0.4 gal

In the interest of continual equipment development, SANY America Inc. reserves the right to change these specifications at any time without prior notification.
©2026 SANY America Inc. HEXPS26BHL95001

In the interest of continual equipment development, SANY America Inc. reserves the right to change these specifications at any time without prior notification.
©2026 SANY America Inc. HEXPS26BHL95001